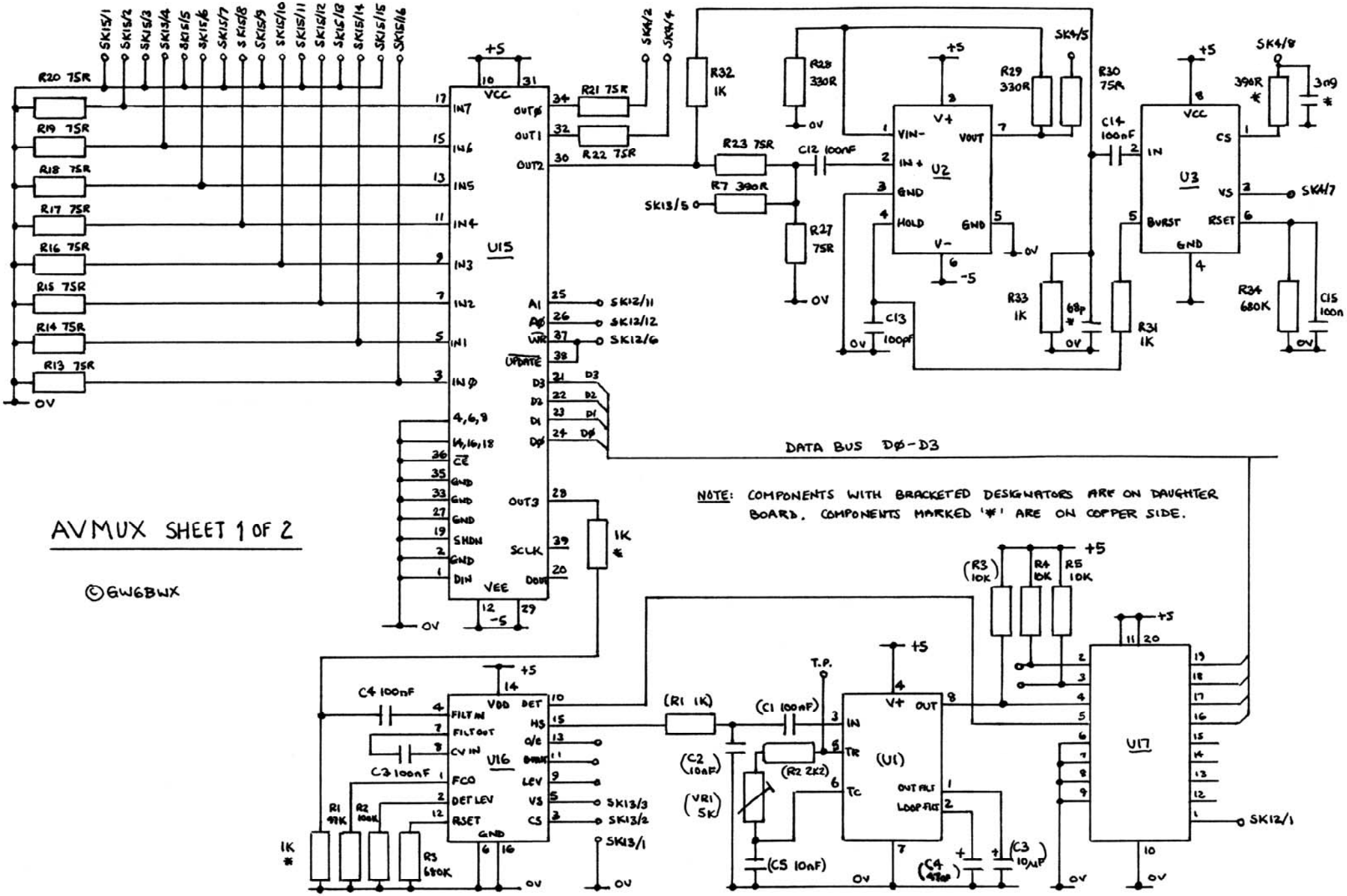
AVMUX SHEET 1 OF 2
©GW6BWX
NOTE: COMPONENTS WITH BRACKETED DESIGNATORS ARE ON DAUGHTER BOARD. COMPONENTS MARKED '*' ARE ON COPPER SIDE.
DATA BUS D0-D3
U15
U16
U17
U2
U3
(U1)
R20 75R
R19 75R
R18 75R
R17 75R
R16 75R
R15 75R
R14 75R
R13 75R
R21 75R
R22 75R
R32 1K
R23 75R
R7 390R
R28 330R
R29 330R
R27 75R
R30 75R
R31 1K
R33 1K
R24 680K
C12 100nF
C13 100pF
C14 100nF
C15 100n
390R *
3n9 *
68p *
SK15/1
SK15/2
SK15/3
SK15/4
SK15/5
SK15/6
SK15/7
SK15/8
SK15/9
SK15/10
SK15/11
SK15/12
SK15/13
SK15/14
SK15/15
SK15/16
SK4/2
SK4/4
SK4/5
SK4/8
SK4/7
SK13/5
SK12/11
SK12/12
SK12/6
SK13/3
SK13/2
SK13/1
SK12/1
(R3 10K)
R4 10K
R5 10K
(R1 1K)
(C1 100nF)
(R2 2K2)
(C2 10nF)
(VR1 5K)
(C5 10nF)
(C3 10µF)
(C4 47nF)
C4 100nF
C3 100nF
R1 47K
R2 100K
R3 680K
1K *
T.P.
+5
0V
-5